S. E. | sem-IV | B10M | ECA & D-II / DEC-2011

V-2nd-HF-Ex-11-D-39

Con. 6758-11. **MP-4369**

(3 Hours) **[Total Marks : 100**

N.B. : (1) Question No. **1** is **compulsory**.
(2) Attempt any **four** questions out of remaining **six** questions.
(3) **All** questions carry **equal** marks **(20 each).**

1. (a) Compare linear and switched mode regulator in terms of efficiency, switching, losses, regulation, power handling capacity and size. **5**
   (b) Write short note on transconductance amplifier. **5**
   (c) Compare different classes of amplifier based on operating cycle, position on Q point and efficiency. **5**
   (d) Difference between clipper and clamper. **5**

2. (a) For circuit shown in **figure**, determine the type of feedback of the circuit, R_{if}, R_{of} and A_{vf} (h_{ie} = 1 kΩ, h_{fe} = 50, neglect the h_{re} and h_{oe}). **10**

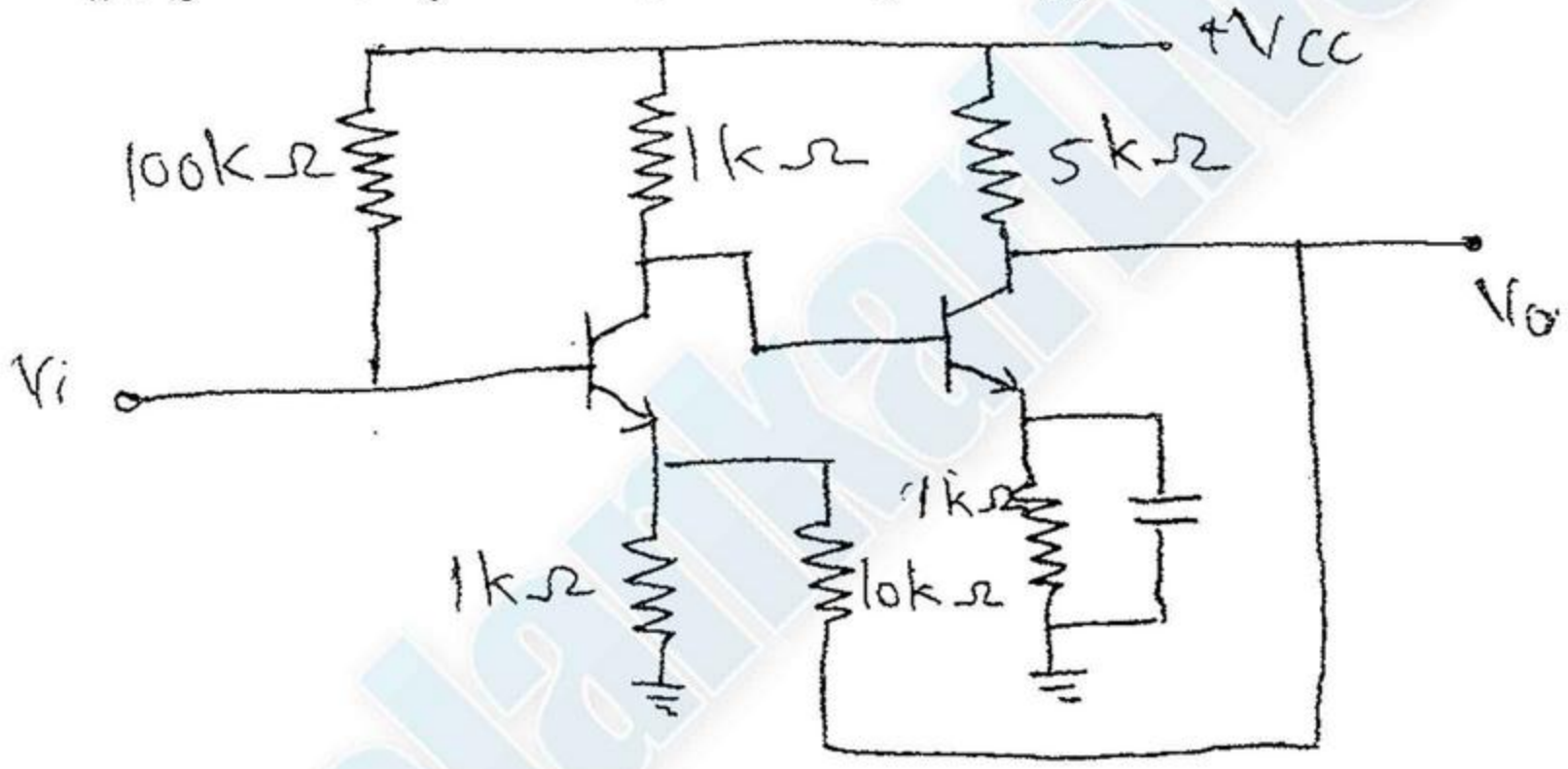

   (b) Draw the block diagram of IC 723 and explain each block. **10**

3. (a) Discuss Miller compensation and how it can be used to amplifier having unstable characteristics. **10**
   (b) What is heat sink ? What is its function A BJT rated power of 15 W and a maximum junction temperature of 175°C. The ambient temperature is 25°C and the thermal resistance parameters are— **10**
   $\theta_{snk\text{-}amb}$ = 4°C/W and $\theta_{cas\text{-}snk}$ = 1°C/W.
   Determine the actual power than can be safely dissipated in the transistor.

4. (a) Draw and explain the working of Non-Inverting Op-amp. Derive the expression for its closed loop voltage gain. **10**
   (b) Draw the circuit diagram for following with values of component using Op-amp. **10**
   (i) Inverting amplifier gain of 5.
   (ii) Non-Inverting amplifier gain of 22.
   (iii) Buffer amplifier.

[TURN OVER

5. (a) Design transformer coupled class A power amplifier to provide 5 W output to 8 Ω load. 12
   (b) Determine load current in voltage to current converter. 8

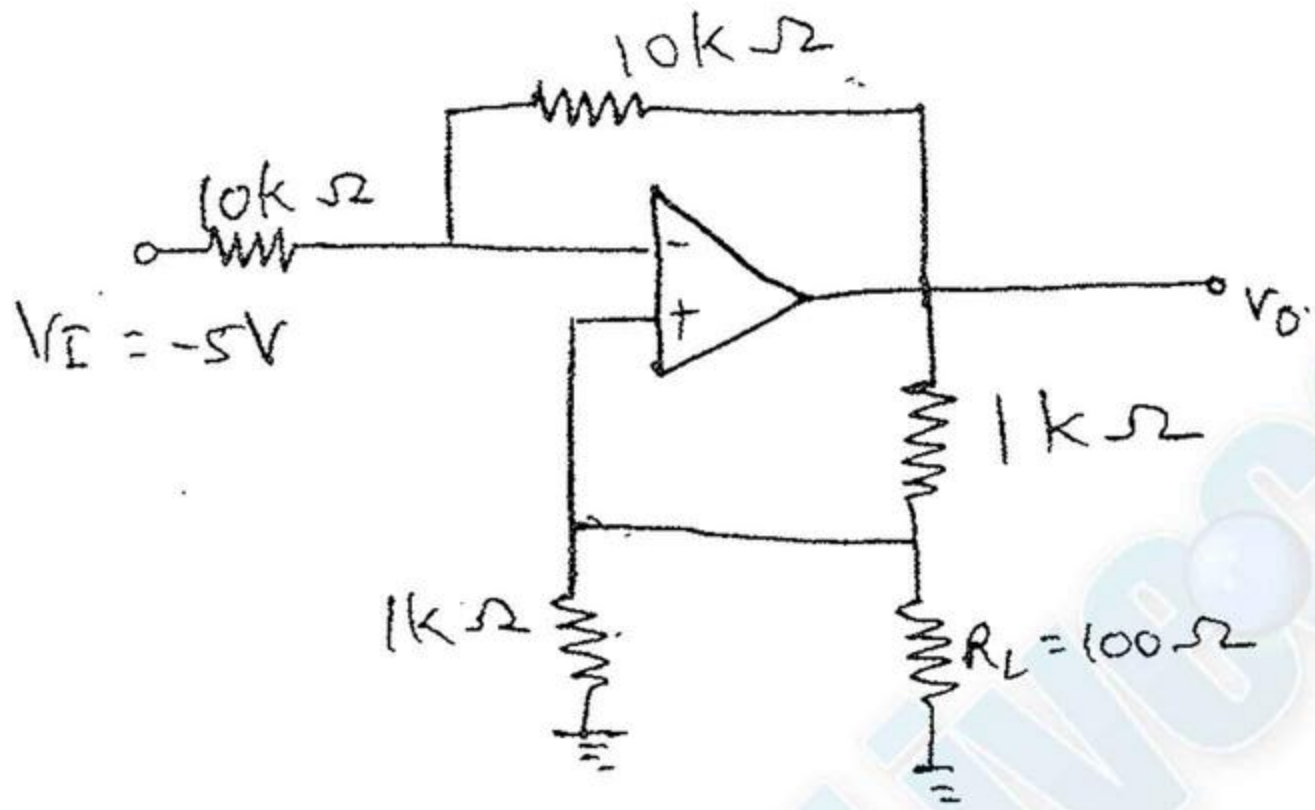

6. (a) Draw the circuit diagram of colpitts oscillator. Derive expression for frequency of sustained oscillations. Determine condition to be satisfied for sustained oscillations. 10
   (b) Draw and explain instrumentation amplifier using Op-amp. 10

7. Write short note on (any **two**) :— 20
   (a) Practical Differentiator.
   (b) Nyquist stability criteria.
   (c) DC to DC converter.

DBEC DATA SHEET

Transistor type	Pdmax @ 25°C Watts	Icmax @ 25°C Amps	$V_{CE}^{(sat)}$ volts d.c.	V_{CBO} volts d.c.	V_{CEO} (Sus) volts d.c.	V_{CER} (Sus) volts d.c.	V_{CEX} volts d.c.	V_{BEO} volts d.c.	T_j max °C	D.C. current gain min	typ.	max.	Small Signal h_{fe} min.	typ.	max.	V_{BE} max.
2N3055	115·5	15·0	1·1	100	60	70	90	7	200	20	50	70	15	50	120	1·8
ECN055	50·0	5·0	1·0	60	50	55	60	5	200	25	50	100	25	75	125	1·5
ECN149	30·0	4·0	1·0	50	40	—	—	8	150	30	50	110	33	60	115	1·2
ECN100	5·0	0·7	0·6	70	60	65	—	6	200	50	90	280	50	90	280	0·9
BC147A	0·25	0·1	0·25	50	45	50	—	6	125	115	180	220	125	220	260	0·9
2N525(PNP)	0·225	0·5	0·25	85	30	—	—	—	100	35	—	65	—	45	—	—
BC147B	0·25	0·1	0·25	50	45	50	—	6	125	200	290	450	240	330	500	0·9

Transistor type	hie	hoe	hre	oja
BC 147A	2·7 KΩ	18μ ℧	$1·5 \times 10^{-4}$	0·4°C/mw
2N 525 (PNP)	1·4 KΩ	25μ ℧	$3·2 \times 10^{-4}$	—
BC 147B	4·5 KΩ	30μ ℧	2×10^{-4}	0·4°C/mw

BFW 11—JFET MUTUAL CHARACTERISTICS

–Vgs volts	0·0	0·2	0·4	0·6	0·8	1·0	1·2	1·6	2·0	2·4	2·5	3·0
Ios max. mA	10	9·0	8·3	7·6	6·8	6·1	5·4	4·2	3·1	2·2	2·0	1·1
Ios typ. mA	7·0	6·0	5·4	4·6	4·0	3·3	2·7	1·7	0·8	0·2	0·0	0·0
Ios min. mA	4·0	3·0	2·2	1·6	1·0	0·5	0·0	0·0	0·0	0·0	0·0	0·0

N-Channel JFET

Type	V_{DS} max. Volts	V_{DG} max. Volts	V_{GS} max. Volts	P_d max. @25°C	T_j max.	I_{DSS}	g_{mo}	$-V_P$ Volts	r_d	Derate above 25°C
2N3822	50	50	50	300 mW	175°C	2 mA	3000 μΩ	6	50 KΩ	2 mW/°C
BFW 11 (typical)	30	30	30	300 mW	200°C	7 mA	5000 μΩ	2·5	50 KΩ	—

UJT type	P_d max. @25°C	I_E max. @25°C	I_P peak pulse current max.	V_{B2E} Volts max.	V_{B2B1} Volts	T_j max	η min.	η max.	R_{BB} KΩ min.	R_{BB} KΩ typ.	R_{BB} KΩ Max.	I_P max. μA
2N2646	300mW	50mA	2Amp.	30	35	125°C	0·56	0·75	4·7	7·0	9·1	5·0